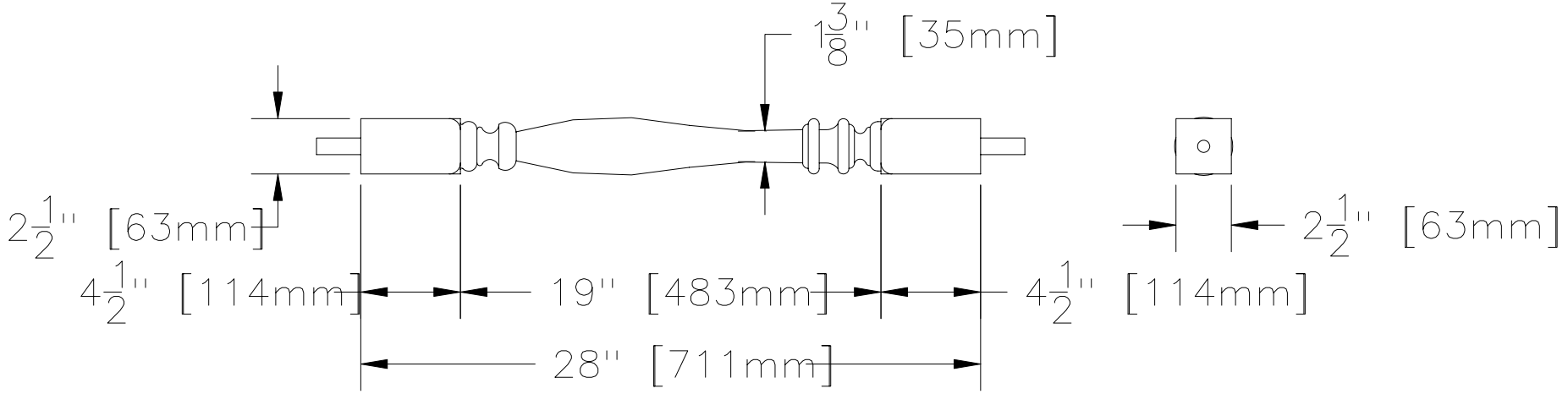
1 3/8'' [35mm]
2 1/2'' [63mm]
4 1/2'' [114mm]
19'' [483mm]
4 1/2'' [114mm]
28'' [711mm]
2 1/2'' [63mm]